3D Modelling

3D Silo modelling project by Clay Johnson - 25134410

Task Assignment

-The assigned task was to make our own 3D model of a silo by:

-Using the Splash Damage art test silo as a reference

-Creating a low poly and high poly model with a complete UV unwrap

-Bake the model in Adobe Substance Painter

-Fully texture the model in Adobe Substance Painter

-Render the completed model in Unreal Engine

Provided reference image

Basic Block Out

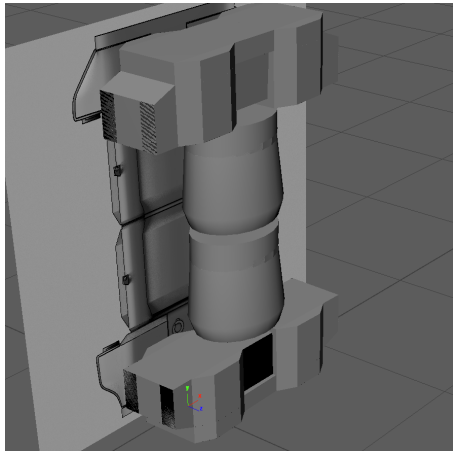

Block-out side view

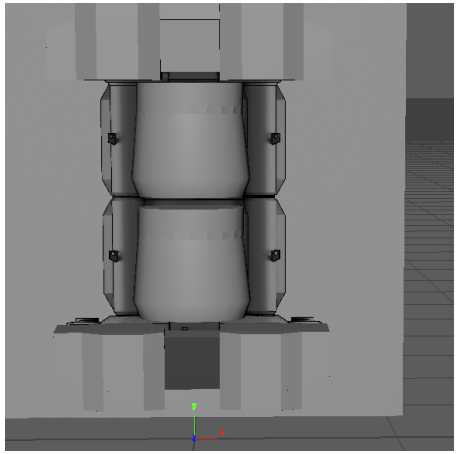

Block-out front view

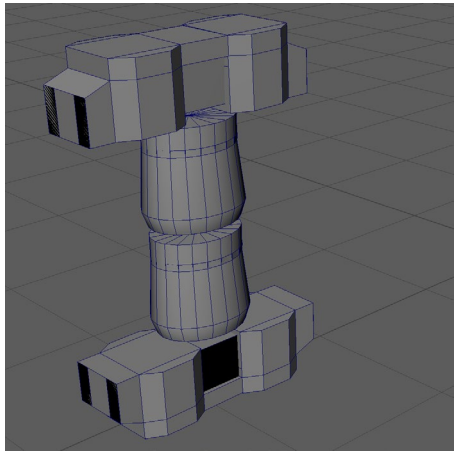

Block-out with wireframe view

My first step in creating the model was to block out the shape of the silo using basic shapes while still making a to-scale version of what the complete silo should look like.

Low Poly Model

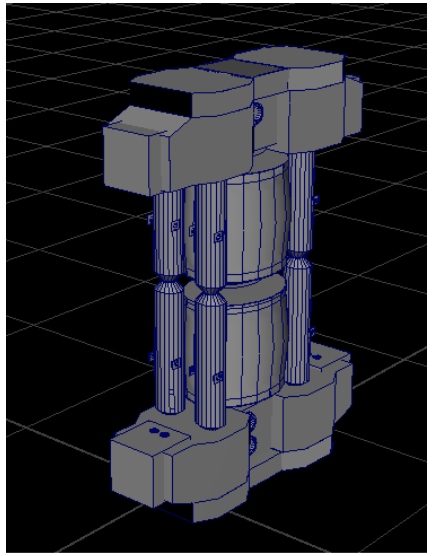

Low-poly side view

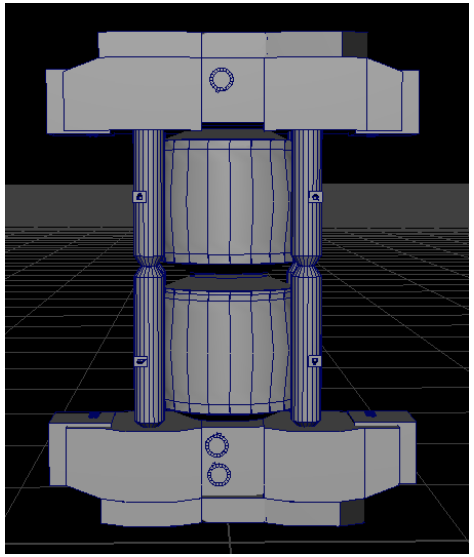

Low-poly front view

Based on the block out design, I created a complete model of the silo with features like bevels that contains very little edge loops to keep the polygon count as low as possible and prevent the model from appearing very smooth while also trying to have a clean topology, lacking n-gons

High Poly Model

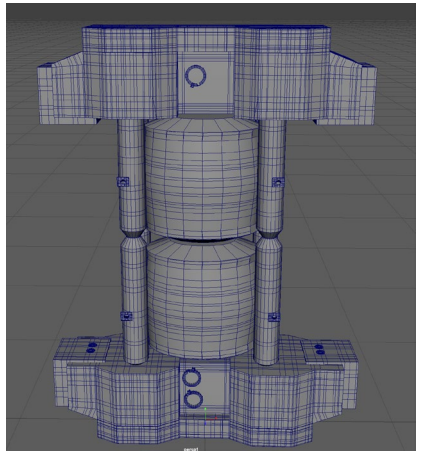

Unsmoothed high-poly model

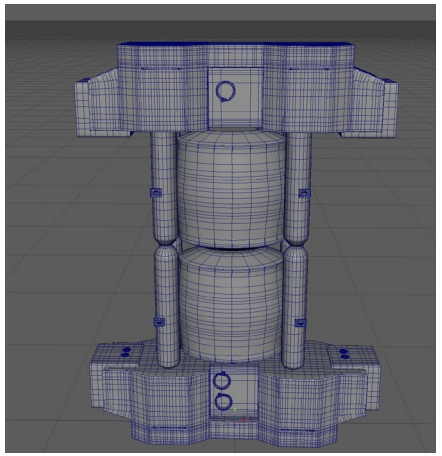

Smoothed preview high-poly model

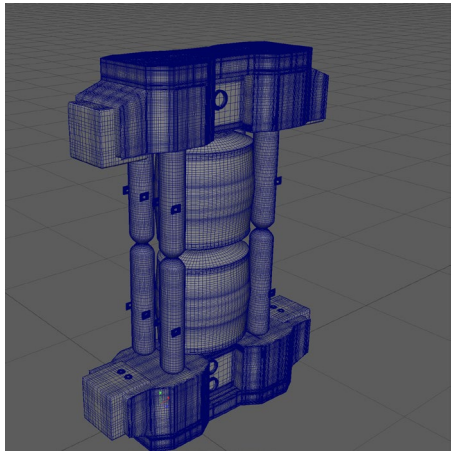

Smooth high-poly model

By adding a lot of edge loops to a duplicate model, I was able to smooth out all the edges of the model. Once I was happy with the final appearance of the high poly model preview, I smoothed mesh preview to polygons to permanently smooth the model.

UV Unwrap

My UV is made to prevent component overlap to ensure that individual parts of the model can be properly textured without errors

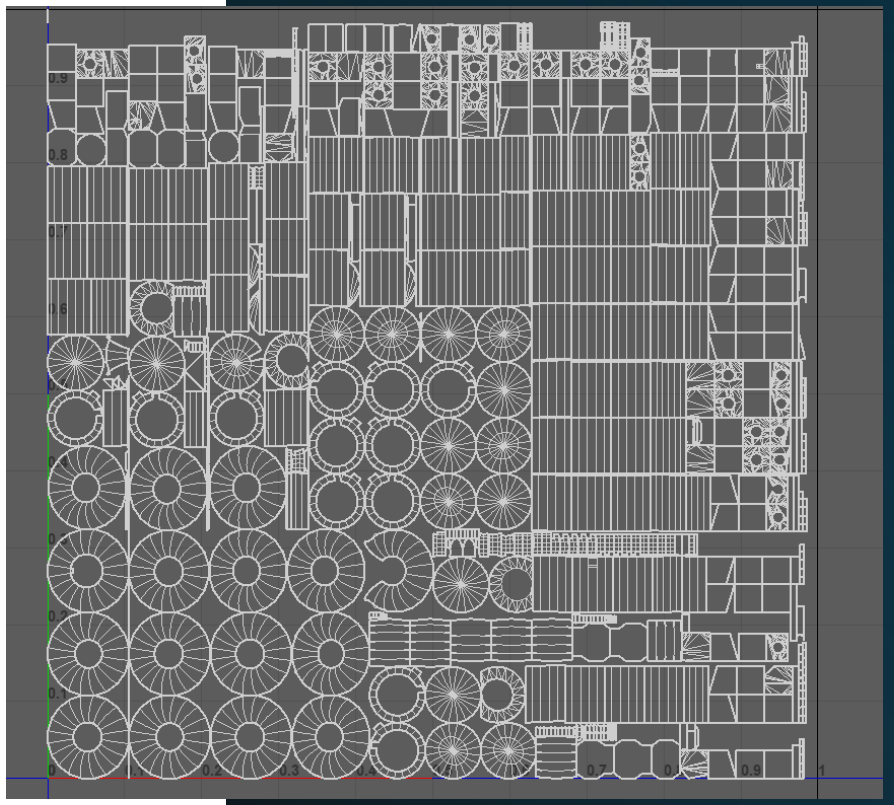

Complete UV unwrap

Naming Conventions

To allow for more efficient baking in Substance Painter, each part of the models were named so I could instantly tell what part of the model I would be looking at. The names were the same for each part of the model with the exception of the suffix '_low' for components on the low poly model and '_high' for the high poly components. At this point, the two models were ready to be exported as two .fbx files for the texturing process in Substance Painter.

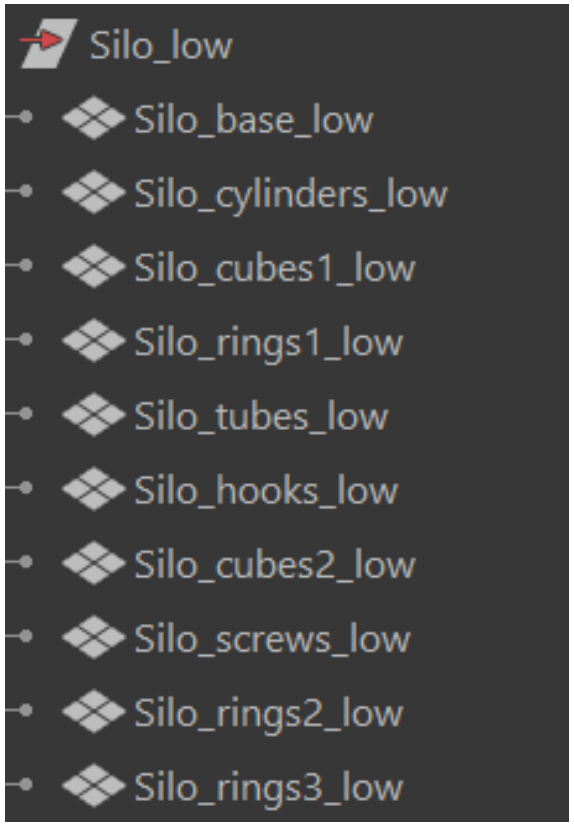

Low-poly names

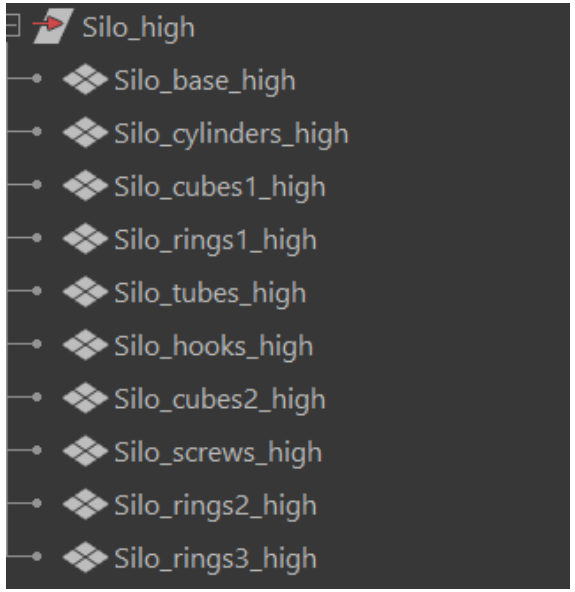

High-poly names

Baking

Untextured baked model

Basic textured model

Fully textured model

Due to the naming conventions I used, I was able to import my low poly into Substance Painter and baked the high poly on top of it by matching the names of each object

After baking the model, I worked on the base colours for each of the objects comprising the model by applying masks to the model using materials available in Substance Painter

After texturing the base colours I added further detail to the model such as the arrowhead shapes on the model. These were added as stamps and applied to a brush as masks.

Exporting into Unreal

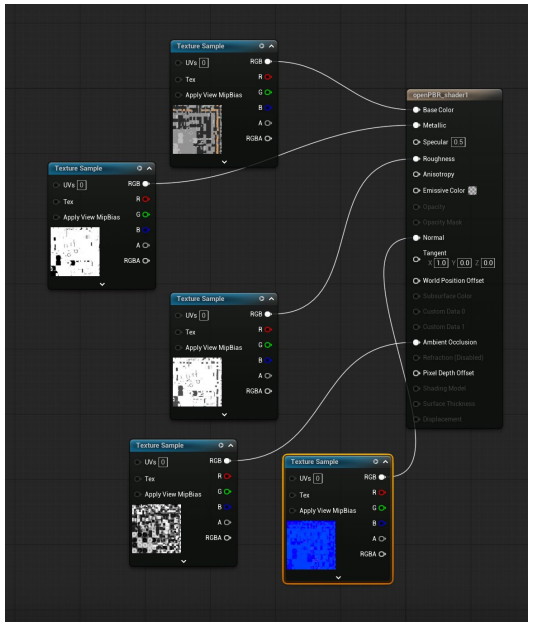

Material viewport in Unreal

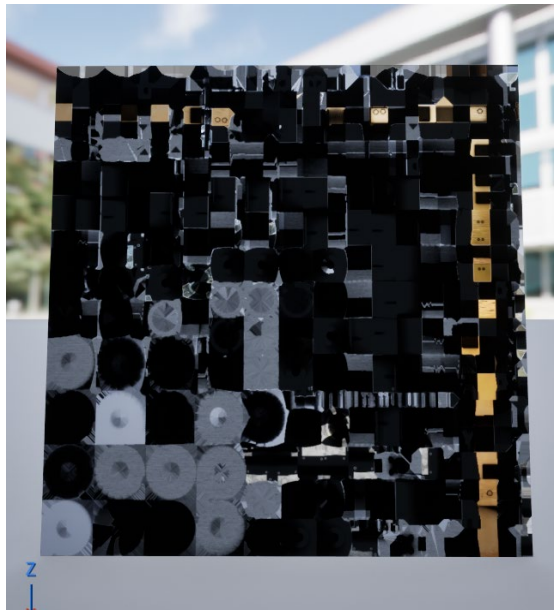

Material preview as a plane

Through substance painter, I had to export the textures I made separately, from there, within an unreal project I then imported the low poly model I had created which also creates a default material. After importing the textures, I then connected all the components of the texturing to the correct part of the material so that the model would appear correctly in-engine.

Final Unreal Export

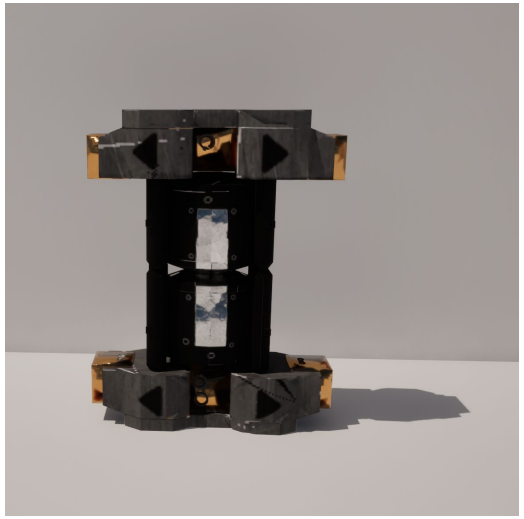

Front view in Unreal without point light

Front view in Unreal with point light

Side view in Unreal with point light

After importing the model into Unreal Engine, I applied the textures using the material onto the meshes and scaled up the model to an appropriate size, I then added a point light to the scene to cast a shadow behind the model.

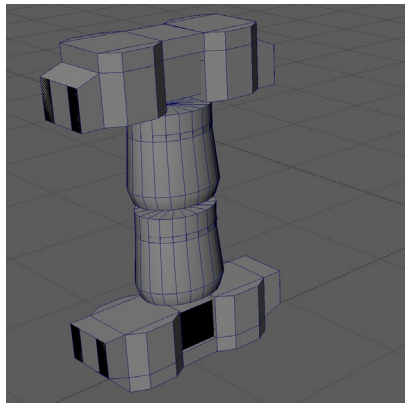

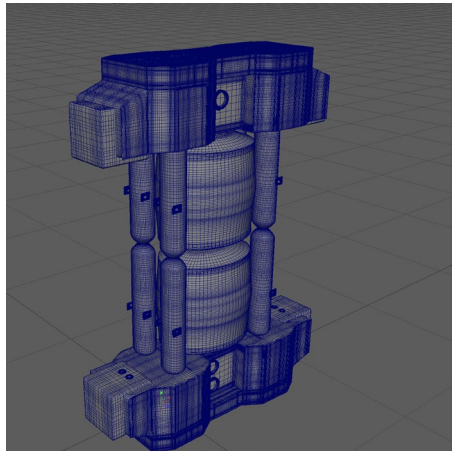

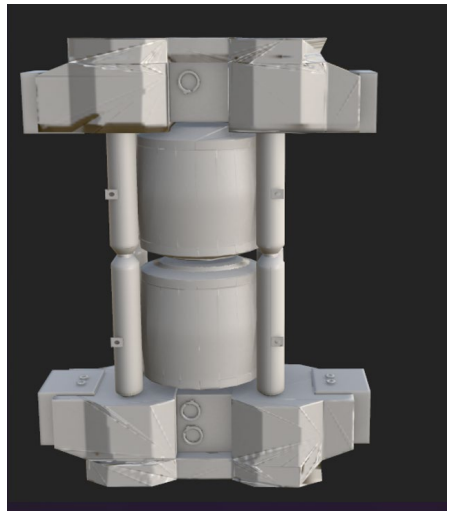
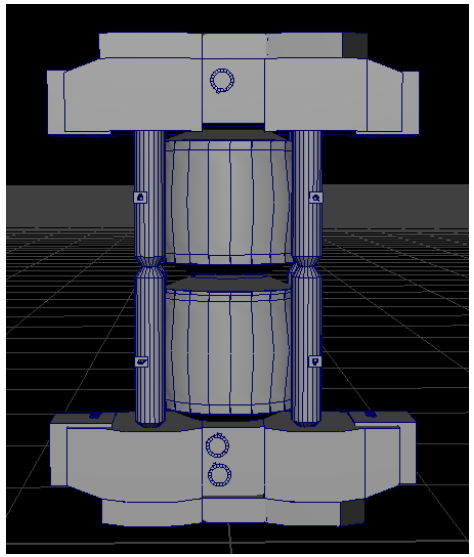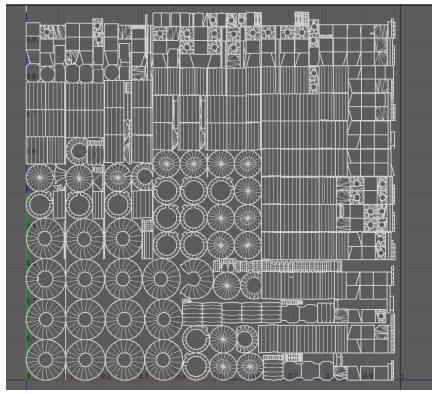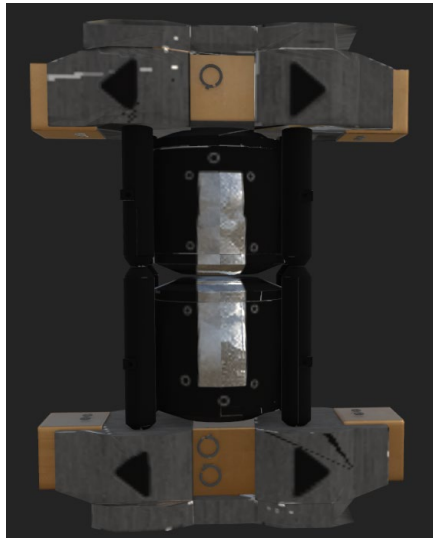
Block out → Low Poly → High poly → UV unwrap → Model baking → Texturing → Unreal export